V.TORCH
Electronics Limited

SAW RESONATOR

Part Number：VTR865B

The **VTR865B** is a two-port, 180° surface-acoustic-wave (**SAW**) resonator in a low-profile metal **TO-39** case. It provides reliable, fundamental-mode, quartz frequency stabilization i.e. in transmitters or local oscillators operating at **865.000** MHz.

1. Package Dimension (TO-39)

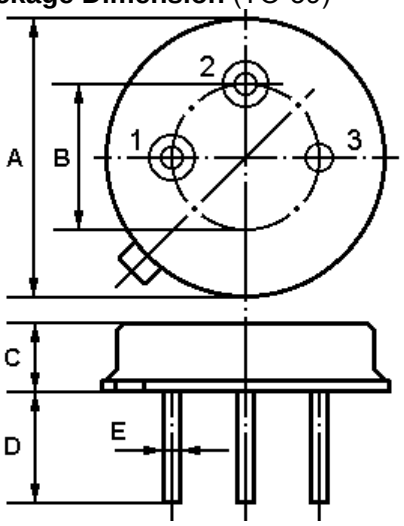

Pin	Configuration
1	Input / Output
2	Output / Input
3	Case Ground

Dimension	Data (unit: mm)
A	9.15±0.20
B	5.08±0.20
C	3.30±0.20
D	3±0.20 / 5±0.20
E	0.45±0.10

2. Marking

VTR865B

Color: Black or Blue

3. Equivalent LC Model and Test Circuit

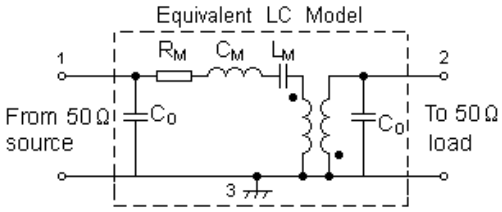

4. Typical Application Circuits

1) Low-Power Transmitter Application

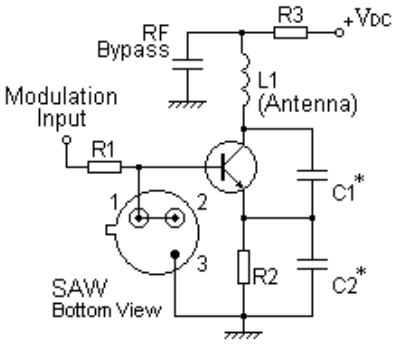

2) Local Oscillator Application

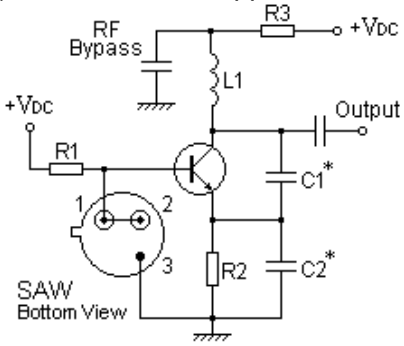

5. Typical Frequency Response

6. Temperature Characteristics

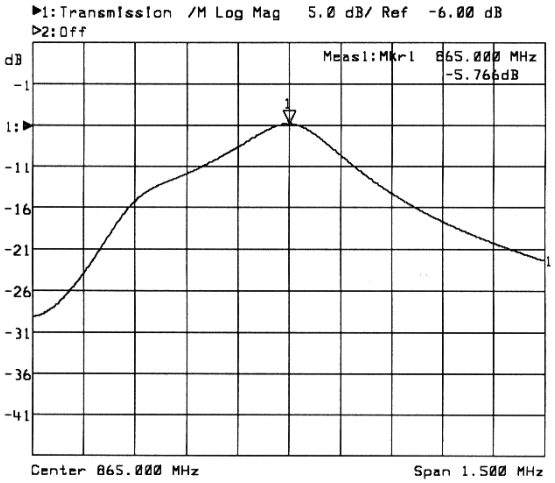

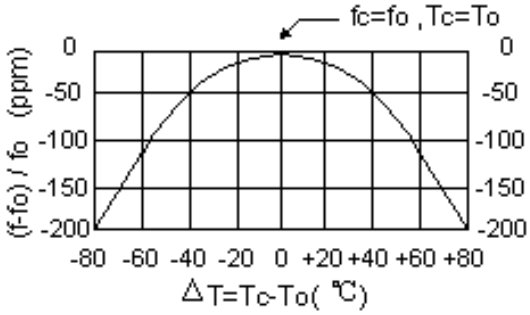

The curve shown above accounts for resonator contribution only and does not include LC component temperature characteristics.

7. Performance

7-1.Maximum Ratings

Rating		Value	Unit
CW RF Power Dissipation	P	10	dBm
DC Voltage Between Any Two Pins	V_{DC}	±30	V
Storage Temperature Range	T_{stg}	-40 to +85	℃
Operating Temperature Range	T_A	-10 to +60	℃

7-2.Electronic Characteristics

Characteristic		Sym	Minimum	Typical	Maximum	Unit
Center Frequency (+25℃)	Absolute Frequency	f_C	864.850		865.150	MHz
	Tolerance from 865.000 MHz	Δf_C		±150		kHz
Insertion Loss		IL		6.0	8.0	dB
Quality Factor	Unloaded Q	Q_U		6,400		
	50 Ω Loaded Q	Q_L		3,200		
Temperature Stability	Turnover Temperature	T_O	25		55	℃
	Turnover Frequency	f_O		fc		kHz
	Frequency Temperature Coefficient	FTC		0.032		ppm/℃^{2}
Frequency Aging	Absolute Value during the First Year	$\|f_A\|$		≤10		ppm/yr
DC Insulation Resistance Between Any Two Pins			1.0			MΩ
RF Equivalent RLC Model	Motional Resistance	R_M		99.5	151	Ω
	Motional Inductance	L_M		117.5214		μH
	Motional Capacitance	C_M		0.2884		fF
	Shunt Static Capacitance	C_O	2.10	2.40	2.70	pF

ⓘCAUTION: Electrostatic Sensitive Device. Observe precautions for handling!

1. The frequency f_C is the frequency of minimum IL with the resonator in the specified test fixture in a 50Ω test system with VSWR ≤ 1.2:1. Typically, $f_{OSCILLATOR}$ or $f_{TRANSMITTER}$ is less than the resonator f_C.
2. Unless noted otherwise, case temperature T_C = +25°C±2°C.
3. Frequency aging is the change in f_C with time and is specified at +65°C or less. Aging may exceed the specification for prolonged temperatures above +65°C. Typically, aging is greatest the first year after manufacture, decreasing in subsequent years.
4. Turnover temperature, T_0, is the temperature of maximum (or turnover) frequency, f_0. The nominal frequency at any case temperature, T_C, may be calculated from: $f = f_0 [1 - FTC (T_0 - T_C)^2]$. Typically, *oscillator* T_0 is 20° less than the specified *resonator* T_0.
5. This equivalent RLC model approximates resonator performance near the resonant frequency and is provided for reference only. The capacitance C_0 is the measured static (nonmotional) capacitance between either Pin 1 and ground or Pin 2 and ground. The measurement includes case parasitic capacitance.
6. Derived mathematically from one or more of the following directly measured parameters: f_C, IL, 3 dB bandwidth, f_C versus T_C, and C_0.
7. The specifications of this device are based on the test circuit shown above and subject to change or obsolescence without notice.
8. Typically, equipment utilizing this device requires emissions testing and government approval, which is the responsibility of the equipment manufacturer.
9. Our liability is only assumed for the Surface Acoustic Wave (SAW) component(s) per se, not for applications, processes and circuits implemented within components or assemblies.
10. For questions on technology, prices and delivery, please contact our sales offices or e-mail info@v-torch.com